GRUNER
Schalten und Bewegen

Technical Data

Relay 750

Description

Polarized latching relay for automotive applications, with screw connections, max. 250 A

Battery discharge during extended transit or storage of vehicles can lead to deterioration of the battery and subsequent warranty claims. The Gruner relay type 750 offers a simple and cost-effective solution, totally isolating the battery from the vehicles electrical circuits to eliminate quiescent drain. Another potential application is aimed at the emergency situation, such as battery isolation after a major impact.

The advantage of the polarized latching relay is the pulse driven operation of only 30 milliseconds to set and reset the relay, which results in low power consumption of the coil and no heating to the coil. The permanent magnet of the armature guarantees the extremely high holding force of the contacts which results in good vibration resistance.

The relays are designed and manufactured in accordance to the Standards of IEC 61810-1.

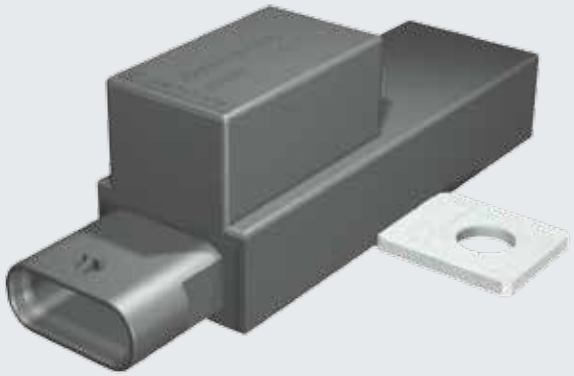

Technical data

Coil data	Rated voltage	12 VDC
	Rated power	12.0 W
	Operating voltage range	6 ... 16 VDC
	Pulse to set	30 ms
	Action time	< 10 ms
Contact data	Max. contact arrangement	1 a
	Contact resistance	typ. 300 µΩ
	Bouncing time at 12V	typ. < 1 ms
	Contact material	$AgSnO_2$
	Rated switching voltage	14 VDC
	Rated switching current	250 A
	Continuous current at 105 °C (25 mm²)	100 A
	Inrush current (6 ms / 2 ms)	550 A
	Short-time overload (10 ms)	3,000 A
	Max. make current	1,500 A
	Max. break current	1,500 A
	Mechanical life	10^6
General data	Ambient temperature	-40 ... +110 °C
	Protection class	IP 6K4K
	Mech. shock, halfine, 11 ms, 6 directions (± x, y, z)	50 g
	Dimensions	75.5 x 25 x 30 mm
	Weight	85 g

2011-12-13 · Copyright by GRUNER AG · Subject to technical changes and design modifications

Standard windings

Standard winding No.	Nominal coil voltage	Operating voltage of the coil	Coil resistance	Tolerance
Double winding	(VDC)	U1 – U2 (VDC)	(Ohm)	(± %)
010	12	6.0 – 16.0	2 x 10	10

The relay can also be used with a single winding (lower operating power to set) if the middle pin of coil is not used.

Contact position		
Terminal-grid	B 1(-)/2(+)	3(+)/4(-)

Identification

750 H - R 1A - B 010 - 001

Example for ordering

Identification code	
Type	750
Options	H = see dim. drawing
Contact material	R = $AgSnO_2$
Contact arrangement	1A = 1 normally closed
Terminal-grid	B
Winding No.	see coil table

Further versions on request

The power terminals can be modified according to customer specification.

Technical drawing

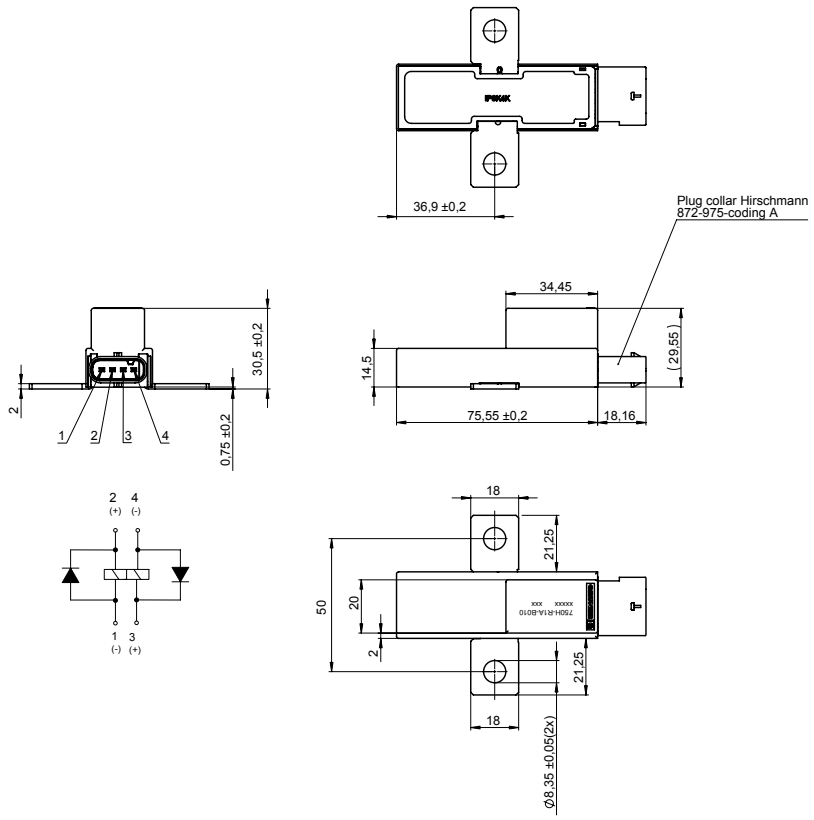

2011-12-13 · Copyright by GRUNER AG · Subject to technical changes and design modifications

GRUNER AG
D-78564 Wehingen · Germany
Phone +49 7426 948-0 · Fax +49 7426 948-200 · www.gruner.de · info@gruner.de